TOWNSHIP 1 SOUTH, RANGE 8 WEST, OF THE WILLAMETTE MERIDIAN, OREGON

TILLAMOOK RA - SALEM DISTRICT
TILLAMOOK COUNTY

010s080wu01.tif

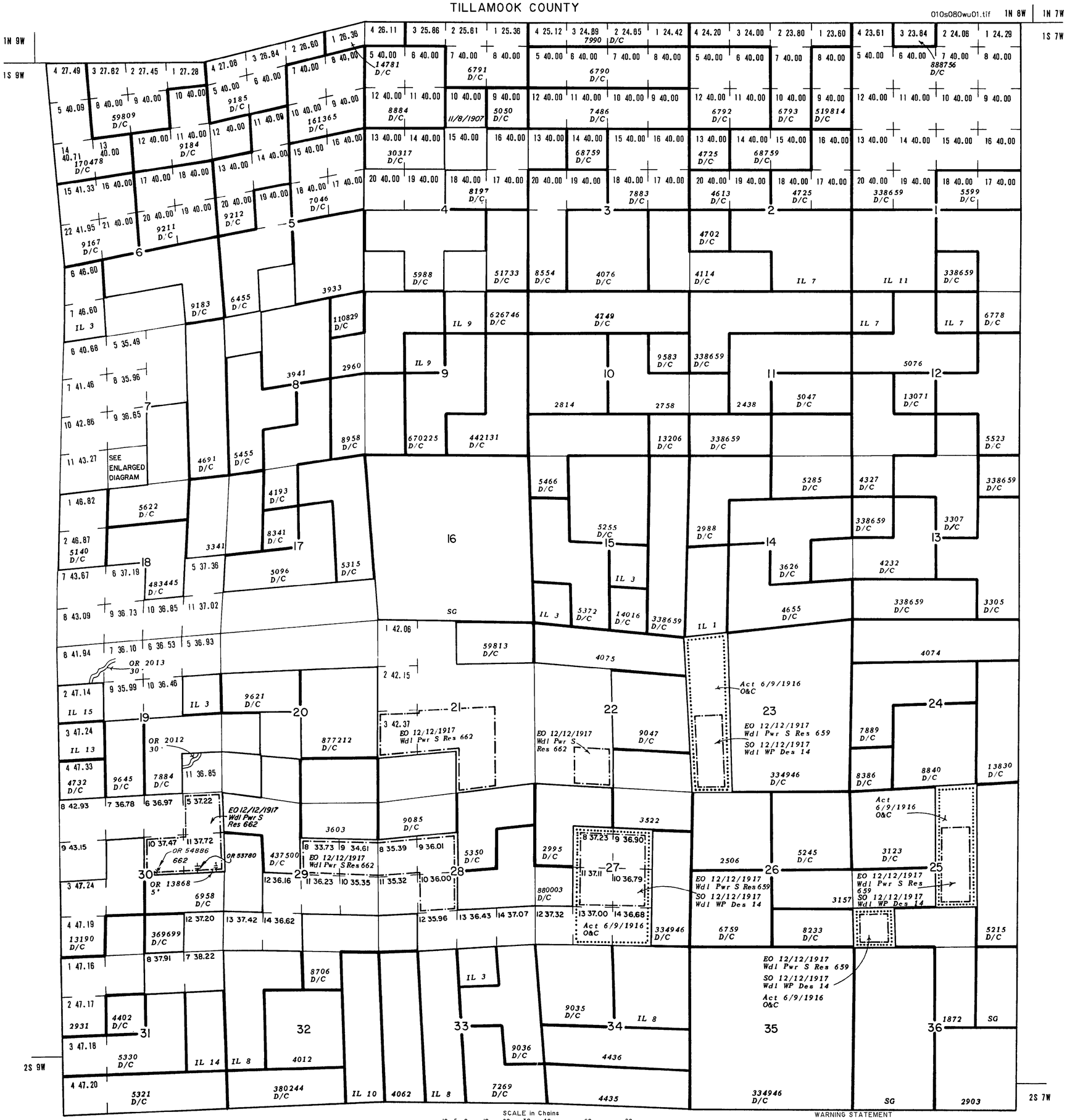

SCALE in Chains

SCALE in Feet

WARNING STATEMENT

This plat is the Bureau's Record of Title, and should be used only as a graphic display of the township survey data. Records hereon do not reflect title changes which may have been attested by lateral movements of rivers or other bodies of water. Refer to the cadastral surveys for official survey information.

STATUS OF PUBLIC DOMAIN LAND AND MINERAL TITLES

MT/USE PLAT

INDEX TO SEGREGATED TRACTS				
RESURVEY	ORIGINAL SURVEY			
TRACT NO	T	R	SEC	SUBDIVISION

FOR ORDERS AFFECTING DISPOSAL OR USE OF UNIDENTIFIED LANDS WITHDRAWN FOR CLASSIFICATION, MINERAL, WATER AND/OR OTHER PUBLIC PURPOSES, REFER TO INDEX OF MISCELLANEOUS DOCUMENTS

OR 19874 R/W 5' Pipeline
Sec 25: NW¼SE¼

PLO 5490 02/12/1975 Wdl Mult Use Mgmt OR 012693
All public lands under Sec Int Juris
Modified by PLO 7043 06/13/1994

ENLARGED DIAGRAM
Sec 7: SE¼ SW¼

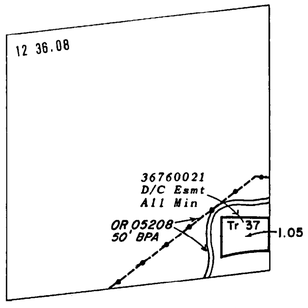

FILE REF 010s080wu01.tif	AutoMAP2000/GTX RasterCAD 6.0
CONVERT JPEG 04/10/2000	BY H GISCH
LAST UPDATE 05/02/2001	BY D LEAVENWORTH
POSTED TO PUBLIC RECORDS 05/02/2001	
SURVEYED TOWNSHIP	
SURVEYED COORDINATE SOURCE	
GCDB NAD 83 CURRENT TO	N/A
IMAGE SOURCE	SCANNED ORIGINAL MTP
PROJECTION	N/A
COORDINATE ELEVATION	N/A
SOURCE FOR METES & BOUNDS	N/A
NOTES	
USE PLAT Lsbl Min	

T 1 S
R 8 W